3200 SERIES (Right Angle Type Mid Mounting Ear)

FEATURE

Insulator Material : PBT UL94V-0
Contact Material : Phosphor Bronze
Plating : Selective Gold Plating Over Nickel On Contact Point
100μ" Tin Plating On Tail Section
50μ" Nickel Underplating

SPECIFICATION

Current Rating : 3 Ampere
Contact Resistance : 20 milliohms maximum
Insulation Resistance : 5000 megohms minimum
Voltage Rating : 800 VAC 1 minute
Operation Temperature Range : -55°C to +105°C
Insertion Force : 412 grams max. per pair
Withdrawal Force : 32 grams min. per pair

ORDERING INFORMATION

3200 - □□□ - □ - □ - □ - W - □

No. of Contacts
Tail Length
A : 3.70 mm
Row To Row
A : 6.35 mm
Plating Code
Mounting Ear
N : No Mounting Ear
W : With Mounting Ear
Other Custom Options

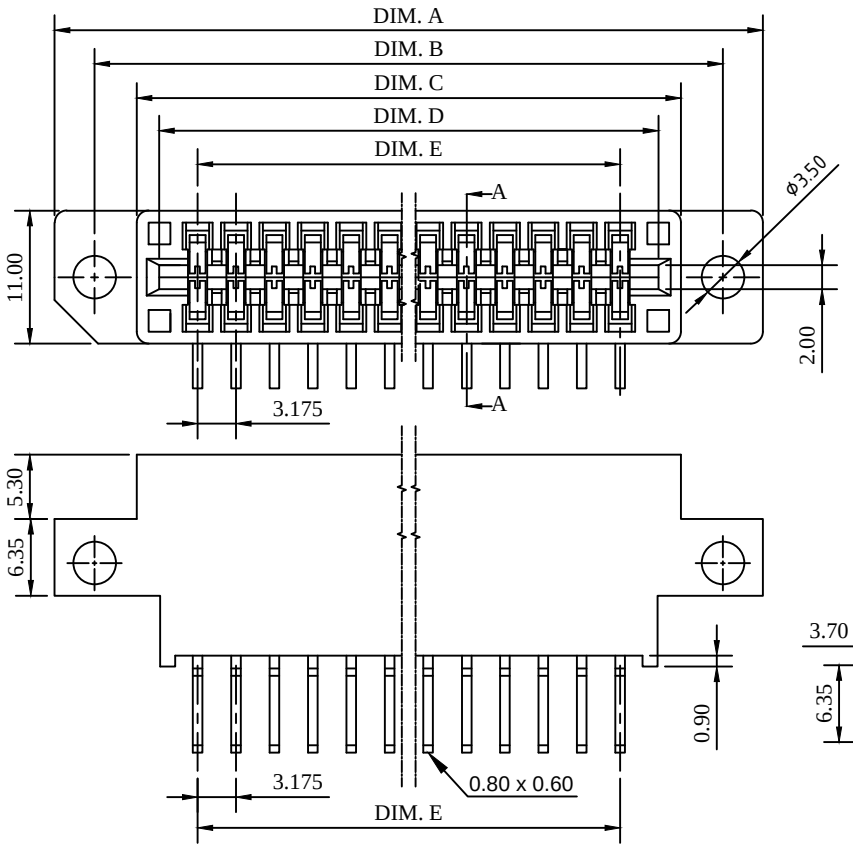

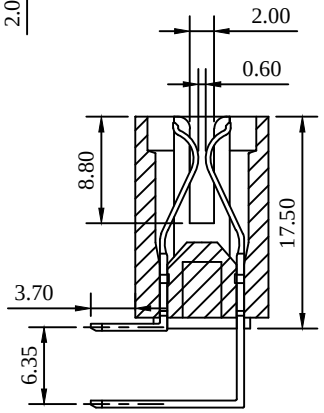

SEC A-A

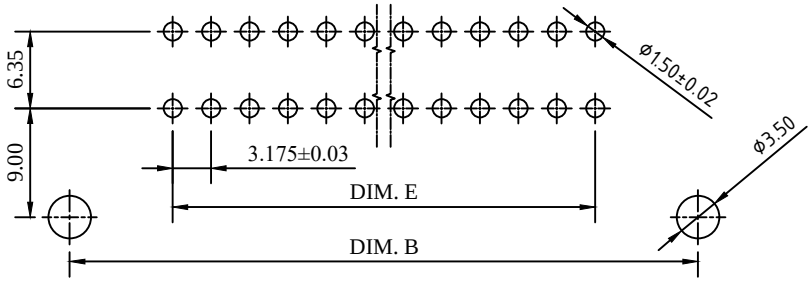

RECOMMENDED PCB LAYOUT

No. of Contacts	Dimensions (Dim.)				
	A	B	C	D	E
15/30	68.08	61.47	54.52	50.81	44.45
18/36	77.60	70.99	64.04	60.33	53.97
20/40	83.95	77.34	70.39	66.68	60.32
22/44	90.30	83.69	76.74	73.03	66.67
28/56	109.35	102.74	95.79	92.08	85.72
30/60	115.70	109.09	102.14	98.43	92.07
36/72	134.75	128.14	121.19	117.48	111.12
40/80	147.45	140.84	133.89	130.18	123.82
43/86	156.97	150.36	143.41	139.71	133.35
50/100	179.20	172.59	165.64	161.93	155.57

Plating Code	
1	10μ"
2	G/F
3	3μ"
4	5μ"
5	G/F Overall
6	30μ"
7	Tin Overall
8	15μ"
9	20μ"

Title : Customer Drawing	**Type : Edgecard Connector**	彩電企業股份有限公司 CTL CHARTRON INCORPORATION
Part No. : 3200 Series		
Description : Pitch 3.175 mm Edge Card Connector R/A Dip Type, Tail Length 3.70 mm Row To Row 6.35 mm, With Mid Mounting Ear		**Tolerances Unless Otherwise Specified :** X. ± 0.50, .X ± 0.38, .XX ± 0.25, X.° ±, .X° ±, .XX° ±
DWG No. : 010 - 0000 - 532	**Date : 01 - Feb. - 2018**	
APPD. : James C. / **CHK. : Connie Z.**	**DRW. : Bryant C.**	

Dim.	Scale	Sheet	Rev.
mm	N/A	1 of 1	J